Instructions for Wiring 8800 Series Electrified Mortise Solenoid Locks, 8800 Series Monitoring Suffixes REX, LBM & DBM & Combined Solenoid & Monitoring Suffixes with Pluggable "ElectroLynx Hinge Connector System"

This instruction manual includes wiring instructions for all electrical types of 8800 series electric mortise locks to ElectroLynx Hinge Connector System. The correct wiring configuration must be selected depending on type and function of the mortise lock being installed. Multiple functions can be combined (ex: 8890FL REX-LBM. Refer to table of contents to select appropriate wiring instruction for mortise product being installed.

Important

Disconnect all input power before beginning installation to prevent electrical shock and equipment damage.
Installer must be a trained, experienced service person.
All wiring must comply with applicable local electrical codes, ordinances and regulations.

CAUTION: The DC voltage applied to the lock solenoid must not exceed 12 / 24 VDC +/- 10% If the voltage exceeds these values the solenoid may be damaged or not function

Specifications / Functions

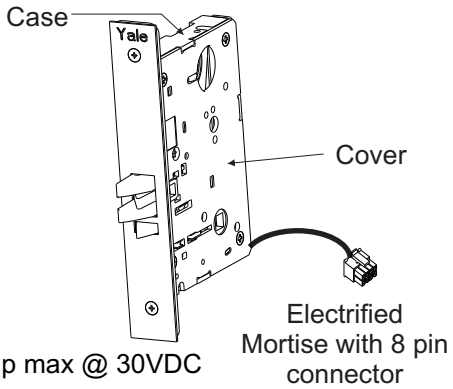

Solenoid
Type: 12 or 24VDC, Intermittent or Continuous Duty
Current draw is 500 mA at 12 VAC/VDC
Current draw is 240 mA at 24 VAC/VDC
Please note bridge rectifier is included inside mortise lock body.
Fail Safe: Models 8880, 8884, 8886, 8888, 8890, 8894-2, 8896 and 8898
Fail Secure: Models 8881, 8885, 8887, 8889, 8891,8895-2, 8897 and 8899

REX-, LBM-, and DBM- Lock Switches: contact rating for all switches: 2 Amp max @ 30VDC

REX- (lever monitor switches). The 8800 REX series mortise lock is designed to allow monitoring of inside and outside lever rotation. The lock uses two switches to monitor the inside and outside lever hub independently.

LBM- (latchbolt monitor switch). The 8800 LBM series mortise lock provides positive indication of latchbolt extension or retraction when the lever is rotated retracting the latchbolt, latchbolt being retracted by key, or if the latchbolt itself is depressed.

DBM- (deadbolt monitor switch). The 8800 DBM series is designed to monitor the position of the dead bolt.

Table of Contents

Yale Commercial Locks & Hardware
100 Yale Avenue
Lenoir City, TN 37771-3226
(865) 986-7511 (Direct)
(865) 986-8630 (Fax)
Website: www.yalecommerical.com

Installation Notes

1. With new applications a raceway harness with 8 and 4 pin connectors will be pre-installed inside door by Assa Abloy door manufacturer when specified during ordering process. Raceway harness kits are available for retrofit applications and for doors manufactured by non-Assa Abloy manufacturers.
2. Wiring to pigtail harness is per facility wiring requirement. Follow individual instructions below.
3. If door raceway connectors are not present remove lock connector and follow wiring in Option A.

Option A

Sample wiring 8880 Thru 8899 series solenoid locks with a 12 or 24VDC Regulated and Filtered Power Supply (Wiring shows power on and lock in secure state)

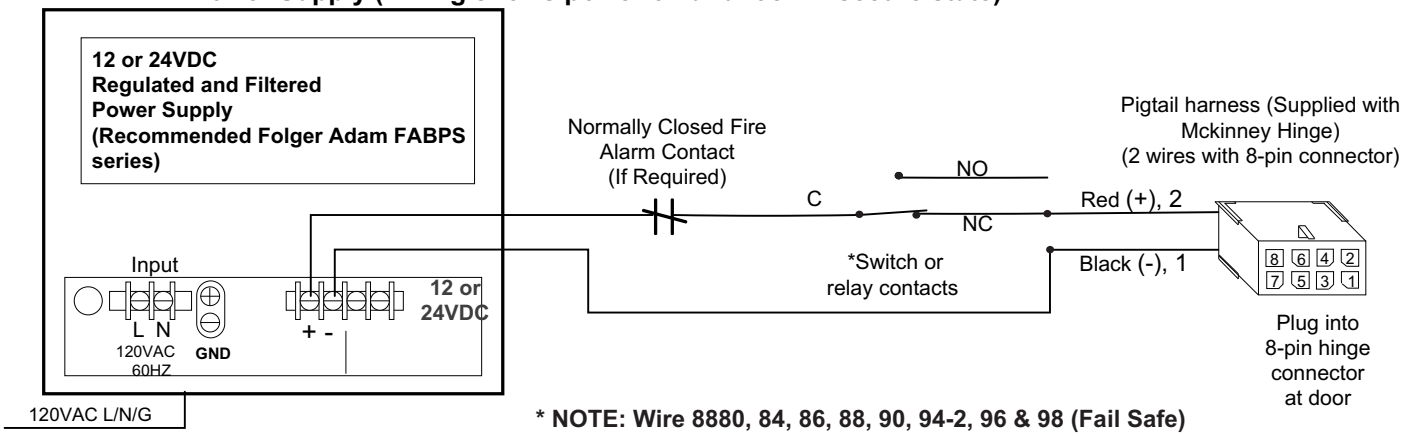

*** NOTE: Wire 8880, 84, 86, 88, 90, 94-2, 96 & 98 (Fail Safe) Locks to switch as shown. For 8881, 85, 87, 89, 91, 95-2, 97& 99 (Fail Secure) Locks wire NO (Normally Open) contact to red wire of pigtail harness.**

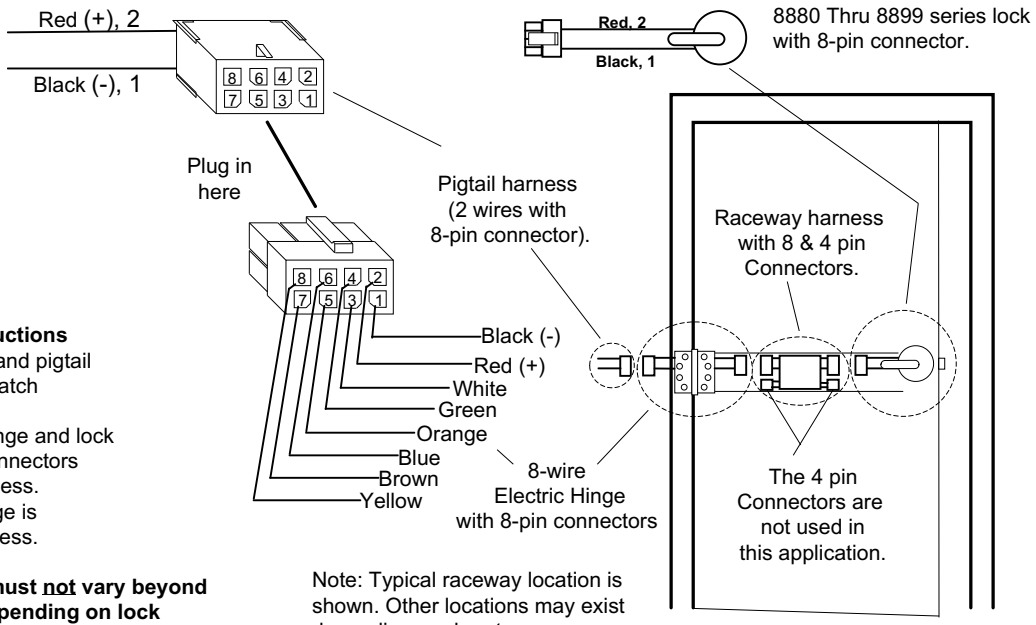

Installation and wiring instructions
Lock, raceway, electric hinge and pigtail 8-pin terminations colors all match

1. Install door. Plug electric hinge and lock connectors into raceway connectors
2. Wire option A to pigtail harness.
3. Ensure proper supply voltage is being applied at pigtail harness.

CAUTION: The DC voltage must not vary beyond 12V+/- 10% or 24V+/- 10%depending on lock solenoid installed. If voltage exceeds these values the lock solenoid may be damaged or not function. Bridge rectifier is included inside lock body.

4. Plug pigtail harness 8-pin connector into electric hinge 8-pin connector.
5. Test lock - Applying 12 or 24VDC unlocks fail secure applications and locks fail safe Applications

Note: Typical raceway location is shown. Other locations may exist depending on door type.

Solenoid with REX- (8 wires)

REX- switch monitor inside and outside levers independently

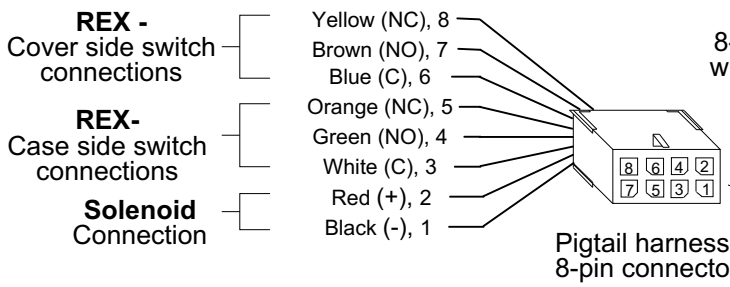

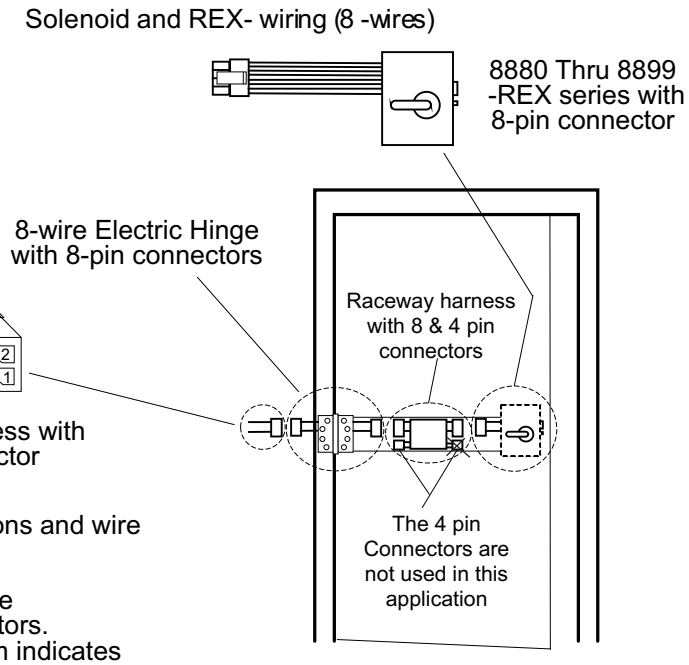

Lock, raceway, electric hinge and pigtail 8-pin terminations and wire colors all match

1. Install door, electric hinge and lock. Plug electric hinge connectors and lock connectors into raceway connectors.
2. Wire to REX- pigtail wires as required. Wiring diagram indicates lock levers in their normal position.
3. Refer to page 2 for solenoid wiring instructions.
4. Plug pigtail connector into electric hinge connector.
5. Test lock.

Note: Typical raceway location is shown above. Other locations may exist depending on door

Solenoid with REX- and LBM or DBM- wiring (11 wires)

REX- switches monitor inside and outside levers independently

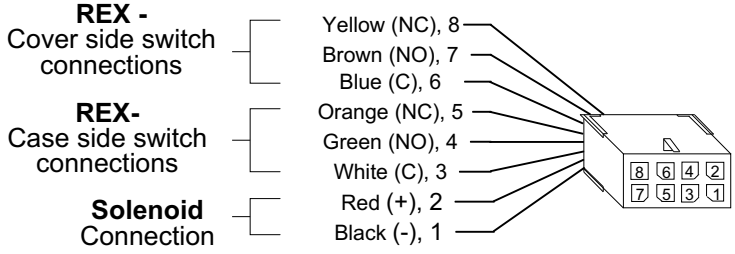

LBM- switch monitors latchbolt

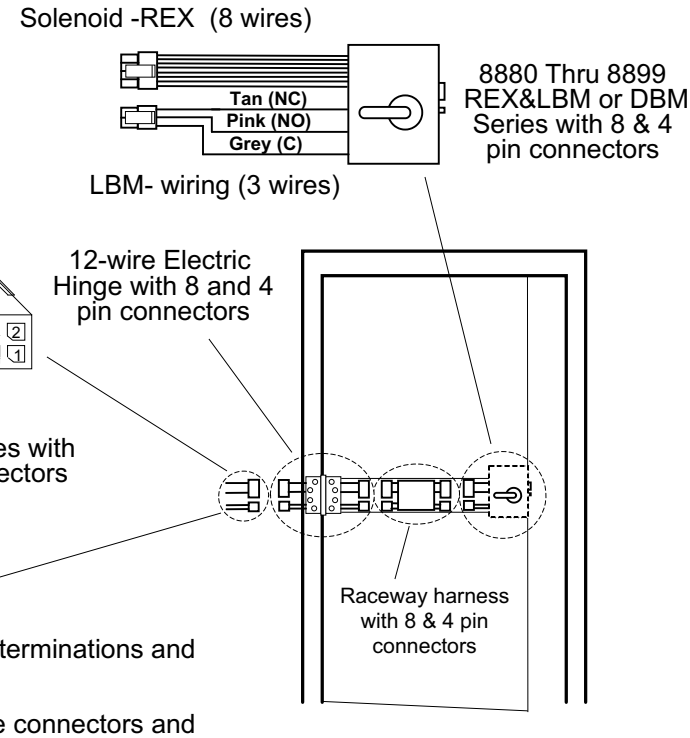

Lock, raceway, electric hinge and pigtail 8-pin and 4-pin terminations and wire colors all match

1. Install door, electric hinge and lock. Plug electric hinge connectors and lock connectors into raceway connectors.
2. Wire to REX- and LBM- pigtail wires as required. Wiring diagram indicates lock levers in their normal position and latchbolt in the extended position.
3. Refer to page 2 for solenoid wiring instructions.
4. Plug pigtail connectors into electric hinge connectors.
5. Test lock.

Note: Typical raceway location is shown above. Other locations may exist depending on door type.

Solenoid with LBM or DBM- wiring (5 wires)

Solenoid wiring (2 wires)

8880 Thru 8899 -LBM or DBM Series with 8 & 4 pin Connectors

Adapter Harness converts 4 pin to a 8 pin connector. Plug in between lock and raceway harness.

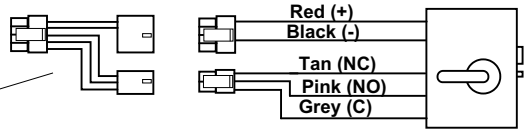

LBM- wiring (3 wires)

LBM- switch monitors latchbolt retraction

DBM -switch monitors deadbolt

8-wire Electric Hinge with 8-pin connector

LBM or DBM- Switch Connections

Solenoid Connections

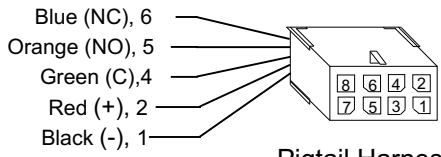

Pigtail Harness with 8-pin connector

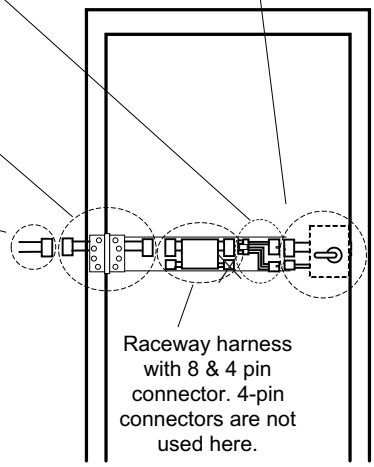

Raceway harness with 8 & 4 pin connector. 4-pin connectors are not used here.

Pigtail, hinge and raceway harness 8-pin and 4-pin terminations/wire colors all match. The adaptor harness converts lock LBM- wire colors to pigtail wire colors.

1. Install door, electric hinge and lock. Plug electric hinge connectors into raceway connectors.
2. Plug adaptor harness in between lock and raceway harness connectors as shown.
3. Wire to LBM or DBM- pigtail wires as required. Wiring diagram indicates lock levers in their normal position and latchbolt in the extended position.
4. Refer to page 2 for solenoid wiring instructions.
5. Plug pigtail connector into electric hinge connector.
6. Test lock.

Note: Typical raceway location is shown above. Other locations may exist depending on door type.

REX- wiring (6 wires) (Without solenoid)

REX- wiring (6 wires)

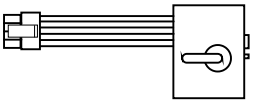

8800 -REX series with 8-pin connector

REX- switches monitor inside and outside levers independently

8-wire Electric Hinge with 8-pin

REX - Cover side switch connections

REX- Case side switch connections

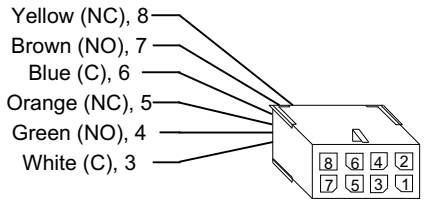

Pigtail harness with 8-pin connector

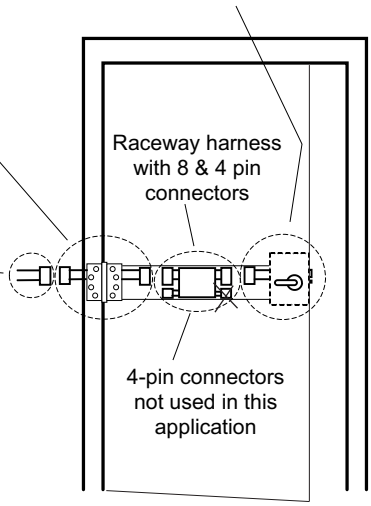

Raceway harness with 8 & 4 pin connectors

4-pin connectors not used in this application

Lock, raceway, hinge and pigtail 8-pin terminations and wire colors all match

1. Install door, electric hinge and lock. Plug hinge and lock connectors into raceway connectors.
2. Wire to REX- pigtail wires as required. Wiring diagram indicates lock levers in their normal position.
4. Plug pigtail connector into electric hinge connector.
5. Test lock.

Note: Typical raceway location is shown above. Other locations may exist depending on door type.

REX- LBM- wiring (9 wires)
(Without solenoid)

REX- switches monitor inside and outside levers independently

REX - Cover side switch connections
- Yellow (NC), 8
- Brown (NO), 7
- Blue (C), 6

REX- Case side switch connections
- Orange (NC), 5
- Green (NO), 4
- White (C), 3

LBM- switch monitors latchbolt

LBM - Switch Connections
- Tan (NC), 4
- Pink (NO), 3
- Grey (C), 2

Pigtail harnesses with 8 & 4 pin connectors

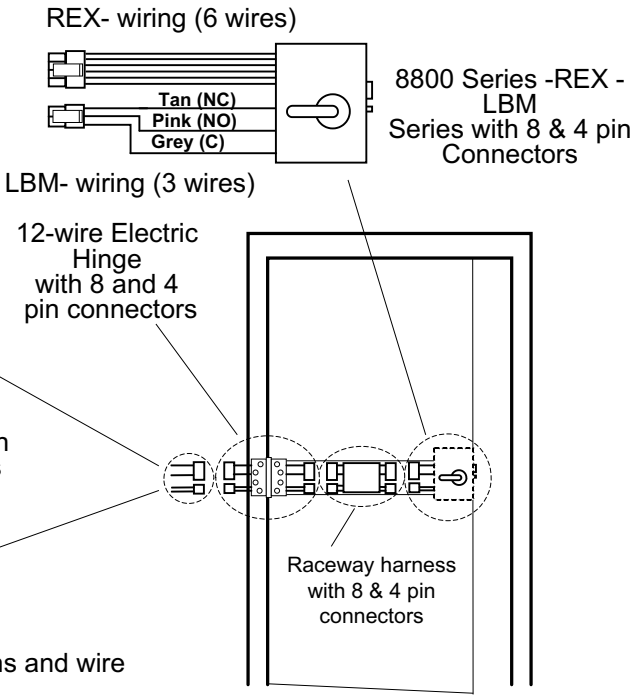

Lock, raceway, hinge and pigtail 8-pin and 4-pin terminations and wire colors all match

1. Install door, electric hinge and lock. Plug hinge and lock connectors into raceway connectors.
2. Wire to REX- and LBM- pigtail wires as required. Wiring diagram indicates lock Levers in their normal position and latchbolt in the extended position.
3. Plug pigtail connectors into electric hinge connectors.
4. Test lock.

Note: Typical raceway location is shown above. Other locations may exist depending on door type.

REX- DBM- wiring (9 wires)
(Without solenoid)

REX- switches monitor inside and outside levers independently

REX - Cover side switch connections
- Yellow (NC), 8
- Brown (NO), 7
- Blue (C), 6

REX- Case side switch connections
- Orange (NC), 5
- Green (NO), 4
- White (C), 3

DBM- switch monitors deadbolt

DBM- Switch Connections
- Tan (NC), 4
- Pink (NO), 3
- Grey (C), 2

Pigtail harnesses with 8 & 4 pin connectors

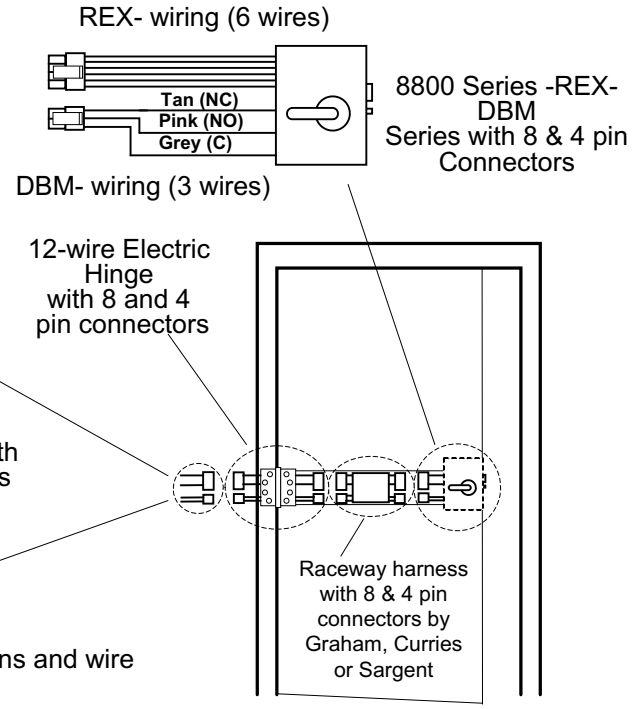

Lock, raceway, hinge and pigtail 8-pin and 4-pin terminations and wire colors all match

1. Install door, electric hinge and lock. Plug hinge and lock connectors into raceway connectors.
2. Wire to REX- and DBM- pigtail wires as required. Wiring diagram indicates lock Levers in their normal position and deadbolt in its retracted position.
3. Plug pigtail connectors into electric hinge connectors.
4. Test lock.

Note: Typical raceway location is shown above. Other locations may exist depending on door

LBM- wiring (3 wires)

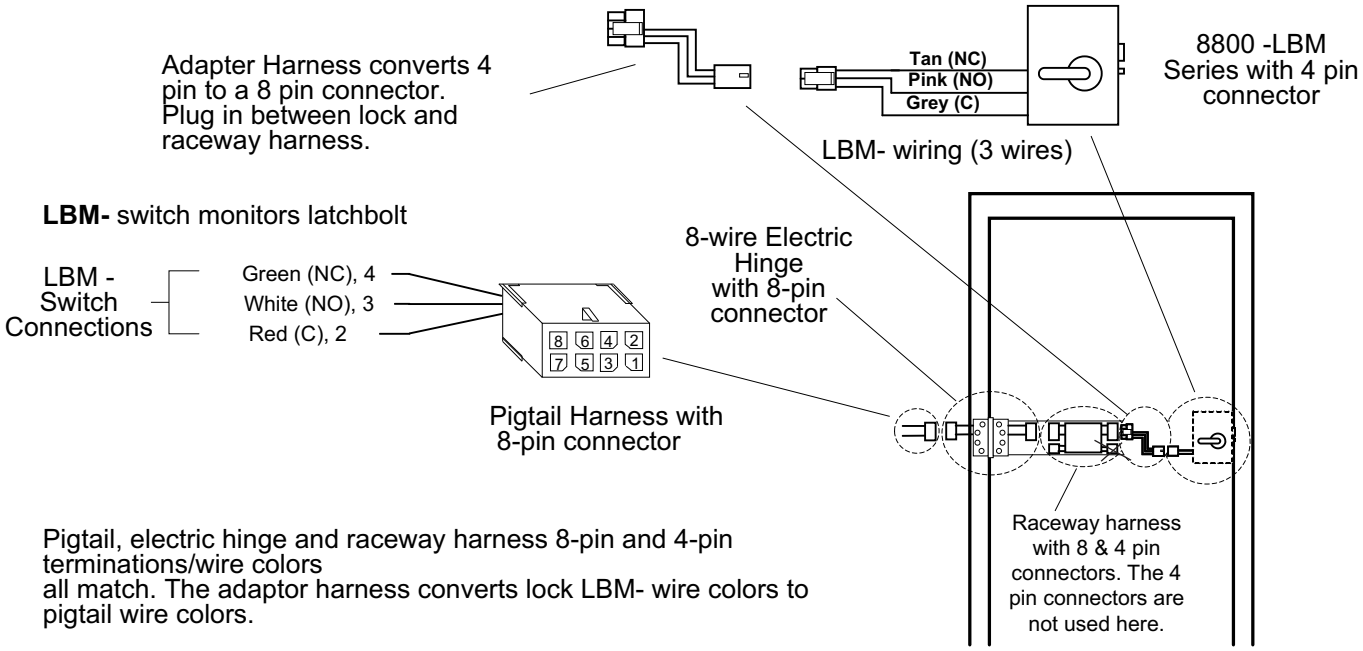

Pigtail, electric hinge and raceway harness 8-pin and 4-pin terminations/wire colors
all match. The adaptor harness converts lock LBM- wire colors to pigtail wire colors.

1. Install door, electric hinge and lock. Plug electric hinge connector into raceway connector.
2. Plug LBM- adaptor harness connector into lock connector.
3. Wire to LBM- pigtail wires as required. Wiring diagram indicates latchbolt in the extended position.
4. Plug pigtail connector into electric hinge connector.
5. Test lock.

Note: Typical raceway location is shown above. Other locations may exist depending on door type.

DBM- wiring (3 wires)

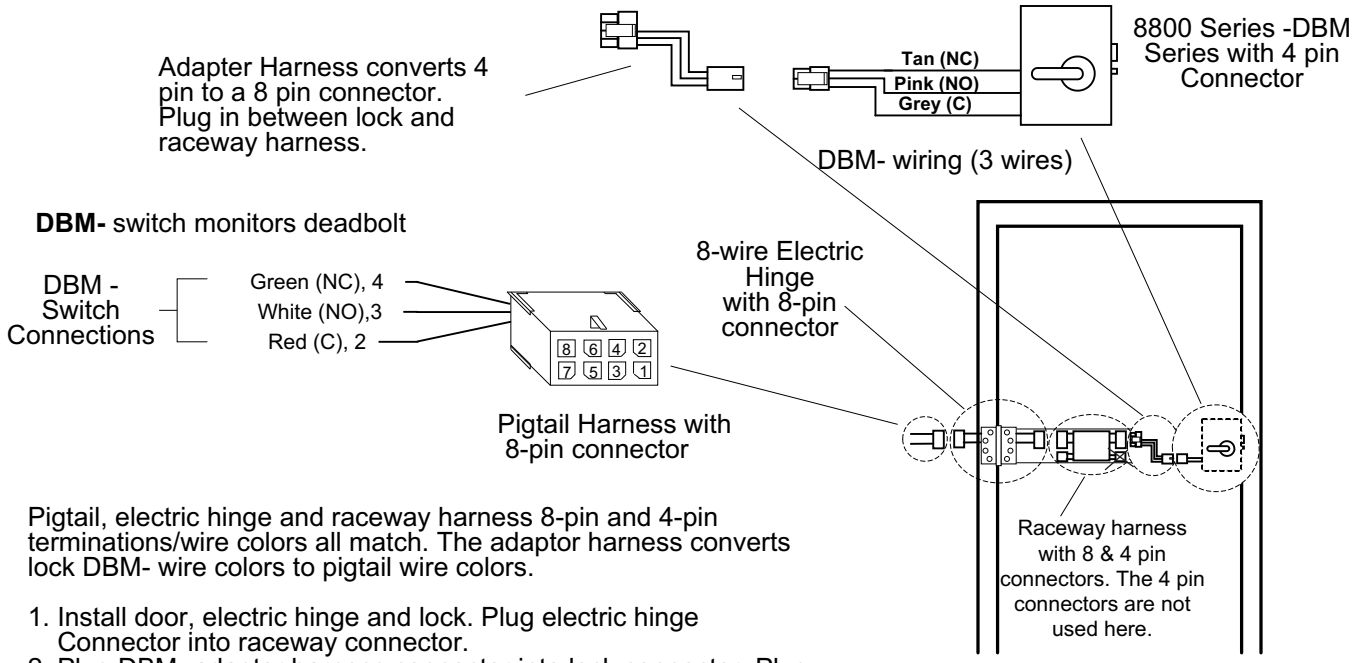

Pigtail, electric hinge and raceway harness 8-pin and 4-pin terminations/wire colors all match. The adaptor harness converts lock DBM- wire colors to pigtail wire colors.

1. Install door, electric hinge and lock. Plug electric hinge Connector into raceway connector.
2. Plug DBM- adaptor harness connector into lock connector. Plug adaptor harness connector into raceway harness connector.
3. Wire to DBM- pigtail wires as required. Wiring diagram indicates deadbolt in retracted position.
4. Plug pigtail connector into electric hinge connector.
5. Test lock.

Note: Typical raceway location is shown above. Other locations may exist depending on door